VINWARES®
visual intelligence

Reg Office : 40/54, Kasi Estate 4th Street, Ashok Nagar, Chennai - 600083
Phone : 044-24710257 Email : vinwares@gmail.com Web Site : www.vinwares.com

Product Name: Flame Proof Bulk Head Light - 45W

Product Assembly Diagram:-

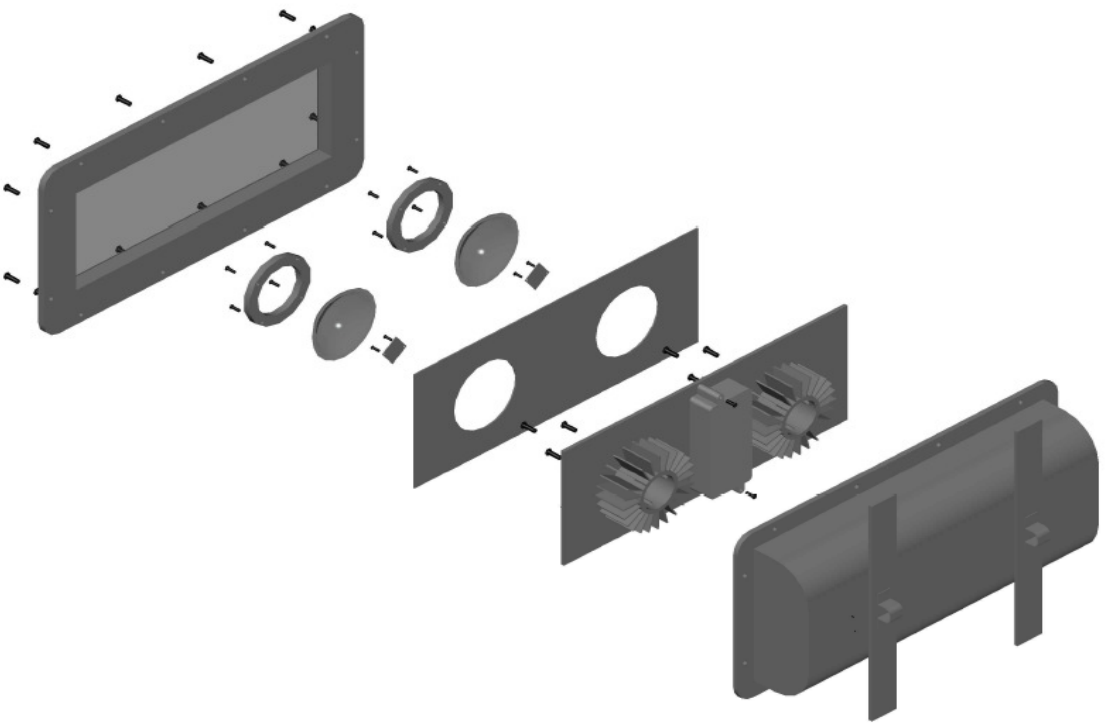

VINWARES®
visual intelligence
ISO 9001 : 2015
CERTIFIED COMPANY